Letters to the editor on Volume 3

A low-noise laboratory-grade measurement preamplifier
Samuel Groner

Marcel van de Gevel writes:

Dear editor,

In his article "*A low noise laboratory-grade measurement preamplifier*" in Linear Audio Volume 3, Samuel Groner explicitly asks for reader comments on the novelty of his figure 8.

Having an input coupling capacitor and a DC servo integrator that feeds back to the input, such that the response becomes a second-order Butterworth high-pass, is by itself not new. I've used it myself in the 1990's and later I saw a schematic of a QUAD current dumping amplifier (not the 405 but a newer model) that does the same. One thing that is new to me is the clever way in which Groner combines this with a low-noise active input resistance circuit by putting resistor R6 in series with his integration capacitor C3.

Regarding low-noise active input resistance circuits as such: I don't know who was the first to connect a big resistor across an inverting amplifier to create an input resistance with reduced current noise, but I do know that this idea has been used for decades in low-noise amplifiers for RF circuits. The first application in audio that I am aware of, is the Hoeffelman and Meys circuit published in the Journal of the Audio Engineering Society in December 1978.

Marcel van de Gevel
Haarlem, The Netherlands

Samuel Groner replies:

Thank you for your interest, comments and the additional reference! I'm well aware of prior art regarding the inverting servo configuration which feeds back to the input. In my opinion, the novelty of my circuit lies in the combination of such a DC servo with input resistance synthesis and an active drain load.

Correcting transducer response with an inverse resonance filter
Steven van Raalte

Marcel van de Gevel writes:

Dear Editor,

I read Steven van Raalte's article "*Correcting transducer response with an inverse resonance filter*" in Linear Audio Volume 3 with great interest. In the article he explains how to vastly improve the transient response of moving-magnet cartridges with a correction filter.

One detail that worries me a bit is his assumption of a frequency-independent effective series resistance of the cartridge. In the mid-1990's, my former colleague Richard Visée measured the impedance of a Shure V15 III cartridge using an HP4194A impedance/gain and phase analyser and found that the phase angle did not exceed 72 degrees at any frequency.
The effective series resistance calculated from his results increased from 1.3388 kohm to 30.1 kohm over the audio band. That is, the losses in the cartridge itself contribute more to damping of the electrical resonance than you would think based on the DC resistance.

When you underestimate the damping of the electrical resonance of the cartridge and load, you also underestimate the quality factor of the mechanical resonance of the stylus and magnet. As the effectiveness of the correction circuit depends on how accurately you can put the zeroes of the correction filter on top of the poles of the mechanical resonance, this will cause unnecessary performance loss. Presumably you will get a small residual high-Q ringing that is still smaller than with a conventional circuit, but not as small as it could be.

A solution could be to try to measure the electrical transfer directly.
You could take a signal generator (if necessary with a resistive voltage divider to lower its output impedance) and connect this to one terminal of the cartridge. Then load the other terminal with the specified load impedance and measure the transfer. In theory, the mechanical resonance will affect the measured result because the electrical current will make the stylus vibrate, which will induce a voltage. This effect appears to be small though; it should also have affected Richard's impedance measurements but it isn't visible in his graphs.

Marcel van de Gevel
Haarlem, The Netherlands

Steven van Raalte replies:

Dear Marcel, thank you very much for sharing this observation of your former colleague Richard Visée. This was new to me; I wasn't aware of the oversimplification of the electrical model of the phono cartridge that I had used back in 1981. But after reading your letter to the editor, I searched the internet for information on these cartridge losses. I quickly found confirmation of these losses and also some directions on how to incorporate these losses in the cartridge model.

In [1] Rod Elliott shows a basic electrical model of a cartridge that consists of an inductance in series with its (DC) resistance, like I had used, but now the inductance is split in two parts with one part damped by a resistor to simulate the semi-inductance of the cartridge. I assume this is in line with your observations. In his article Rod also shows a similar measurement setup as proposed by you to measure and estimate the electrical cartridge parameters. And already in 1975, Björn Hallgren presented an enhanced electrical model of the cartridge using a frequency dependent resistor in parallel with the full (!) inductance [2] to represent the losses. The losses are dependent on the magnetic material and the construction of the cartridge. For instance, US Pat. 4,140,886 shows a cartridge construction to minimize the eddy current losses to extend the usable frequency range [3]. Apparently, some cartridges are less affected by eddy current losses than others, maybe even to such a low level that the effect of these losses can safely be neglected. For other cartridges these eddies are a real issue.

In hindsight, the 930 mH inductance of the Stanton 681 EEE MK III must have been measured with a relatively low test frequency, to minimize these losses. A further search confirmed this and revealed that this value is specified at 10 Hz [4], which is not mentioned in the current manufacturer's datasheet.

But now the question is in what way these eddy current losses can be taken into account and how this phenomenon affects the possibility to compensate for resonances. You are quite right that by taking the additional damping into consideration, a lower Q-factor for the mechanical resonance is needed to obtain a reasonably flat frequency response. Consequently the inverse resonance filter should have a lower Q too.

I have simulated these losses by adding a damping resistance across a part of the cartridge inductance. As I don't have a real Stanton 681 EEE MK III cartridge at hand to measure and determine its parameters, I just took the resistance value from [2] for R_{loss} and divided the original coil inductance into a 2/3 part and a 1/3 part, with the resistance across the bigger part. It is unlikely that this 68 kΩ is exactly the correct value, but at least its influence can be studied. Upon entering these parts in Circuit Maker 2000, however, I noticed some errors in the resistor values of the inverse resonance filter of my original article. I suppose I have been investigating different resistor values and have accidentally copied the values of the last simulation into the final circuit diagram for publication. Because the simulation results of the published circuit are almost identical to the results of the correct circuit, I didn't notice my mistake. Anyway, I will use this opportunity to show the corrected circuit first, followed by a version of the new setup in which the eddy current losses are modeled.

Figure 1 is what figure 11 of the original article should have been. The resistor values of the inverse resonance filter now follow the normalized values of the original figure 4 exactly. It compensates for the mechanical resonance with a resonance frequency f_0 = 21.5 kHz and Q = 4.12.

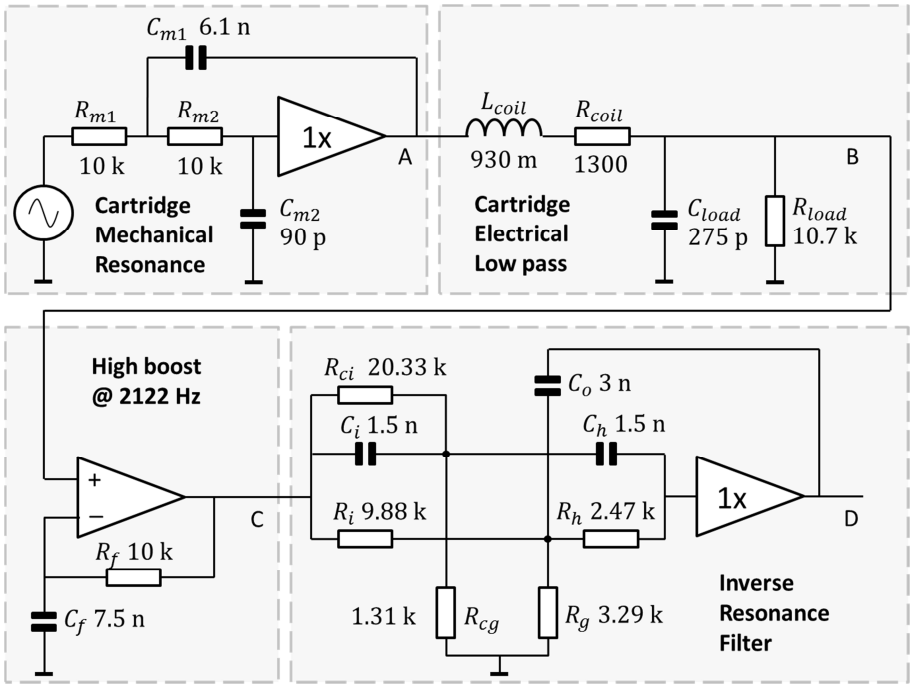

Figure 1: Original system setup for simulation (corrected)

Figure 2 is almost identical to figure 1, but uses an enhanced model of the cartridge electrical low pass filter. The 68 kΩ value for the damping resistor is just an example. Using this value, simulation shows that the mechanical resonance filter now can have a $Q = 3.29$ for approximately 2 dB less peaking at 21.5 kHz. The values of C_{m1} and C_{m2} of the mechanical resonance filter are changed accordingly, as are the values of R_{ci} and R_{cg} of the inverse resonance filter.

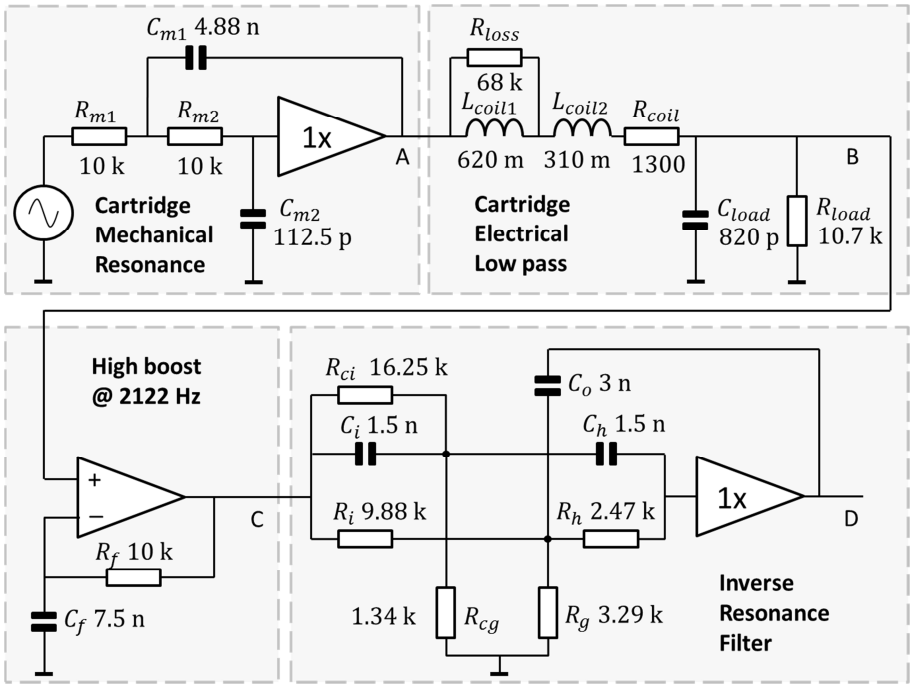

Figure 2: System setup for simulation with enhanced cartridge model

In spite of the addition of R_{loss}, simulation shows that R_{load} can remain 10.7 kΩ to get a first order roll off at approximately 2122 Hz, but then C_{load} must be increased to 820 pF. This load impedance gives virtually the same frequency response for a cartridge including R_{loss} as did the original load impedance (275 pF // 10.7 kΩ) for the cartridge without R_{loss}. Also, figure 10 of the original article, showing the cartridge square wave responses with an over-damped cartridge, remains in essence the same for both cases. So, it appears that (in this case) the addition of R_{loss} can be compensated for completely by increasing the value of C_{load}.

[1] http://sound.westhost.com/articles/cartridge-loading.html
[2] B. I. Hallgren, "On the noise performance of a magnetic phonograph pickup", JAES, Sept. 1975
[3] http://www.google.com/patents/US4140886
[4] http://www.adelcom.net/StantonCart1.htm

A Mechatronic approach to active subwoofer design
Robert Munnig Schmidt

Jean-Marc Plantefève writes:

Dear Editor,

I thank Mr. Munnig Schmidt for his exciting article! I am a French DIYer and I am interested in electroacoustic. I allowed myself to simulate this project in LTspice (file attached). The characteristics are verified when the 5k potentiometer is set to 0.6k and when the voice coil inductance is neglected. But when inductance is set to 1.6mH, an uncontrolled resonance appears around to 90Hz. This results from the fact that sqrt[La/(Mms/Bl²)] is about 6.28*90 and Ra - Ro/2 gives a low damping ratio. Should we not use a negative *impedance* (Ro+Lo) rather than a simple negative resistance Ro? (jm-1.asc)

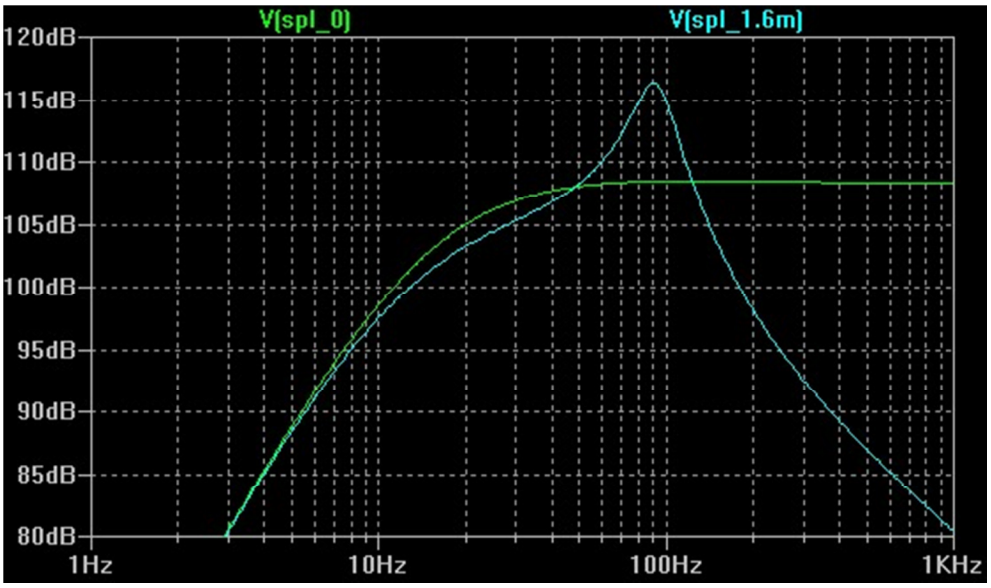

By the way, the capacitor value for the bass boost is missing in fig 12; I assume the value would be 100nF? Also at page 128, I think that we must read Gc=-0.272/1.8 and not Gc=-0.272*8. Finally, what reference do you recommend for the LEM module?

Jean-Marc Plantefève.
Roncq, France
http://jm.plantefeve.pagesperso-orange.fr

Robert Munnig Schmidt replies:

Dear Mr Plantefève,

Thank you for your comments. To start with the last remarks indeed for some reason the 100 nF has disappeared from the original drawing that I used in the lectures before writing the article. Also you are right in that the multiplication should be a division which also corresponds with the answer (-0.15). Regarding the LEM I have no other reference than the website of the company; the data sheet can be downloaded from http://www.lem.com/

Now the important stuff. First of all I did indeed observe a resonance in the measurements but only when the negative resistance of the amplifier became larger than the total resistance of the loudspeakers and it happened at a higher frequency. I indeed assumed this was due to the combination of self-inductance and motion EMF which cause a resistive behaviour around 100 Hz (the minimum in the graph below).

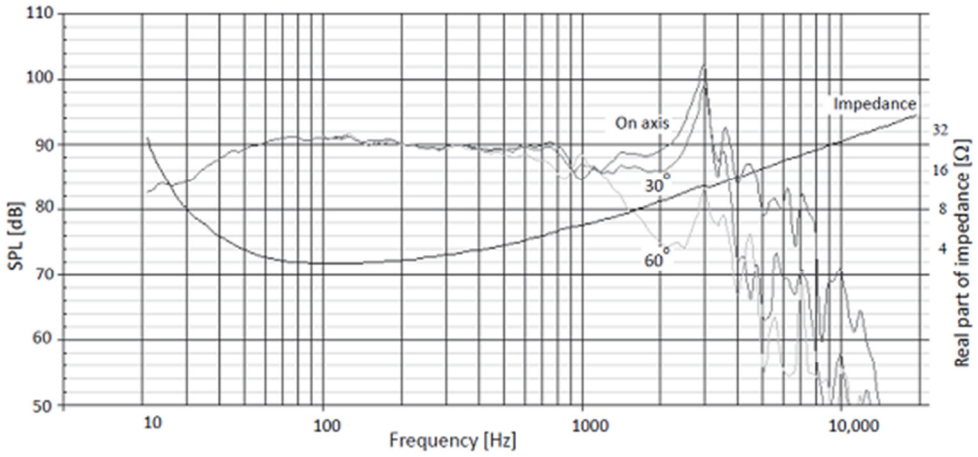

More important is that a purely real impedance around 90-100Hz without phase lag (>100Hz) or phase lead (<100 Hz) to the current could not cause the effect that you have seen in the modelled response around 90 Hz and now we have to take a look at your elaborate model what causes this phenomenon.

I have to admit that I am not yet very familiar with all possibilities of LTspice. As you have noticed I am coming from the mechanical domain so I have not much experience with the use of the electronic equivalent of a loudspeaker. Still I think I can comment on some elements in your model.

The first that I see is that R2, C1, L2 and L4 are not connected to anything. This means that the dynamic properties (mass, compliance) of the first loudspeaker are not taken into account. The second point is that I do not understand how you derive the current as parameter for the LEM module.

I see as parameter "E3 4m". I suppose this means that the output of the LEM module is 4mA times the output voltage of the Hypex amplifier. In that case you do not measure the current but the voltage.

I think that it is better for modelling to measure the current with a small series resistor. In the attached file (rms-1.asc) I changed all of this and though I also do not achieve the same result as in reality it looks already a bit better. There remains a question for me about your equivalent model. To derive the SPL you use a formula with a self-inductance of \rho*Sd/(0.5\pi*d *2e-5}. I do not see this in comparable equivalent circuits, like the one below. I understand that you exchanged the transformer for the equivalent impedances with a factor BL^2 but I do not see your inductor (nor the capacitor of Xc).

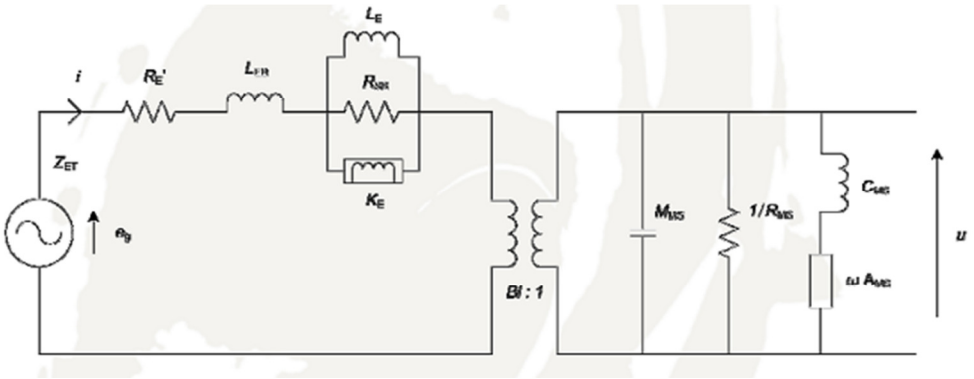

Jean-Marc Plantefève comments:

Dear Mr. Munnig Schmidt, I must apologize that there was actually an error in my first comment - the loudspeakers were not correctly in series. It's now rectified. So, resonance is more logically at 113Hz: 1/sqrt(La.Mms/Bl²) equal 6.28*113.

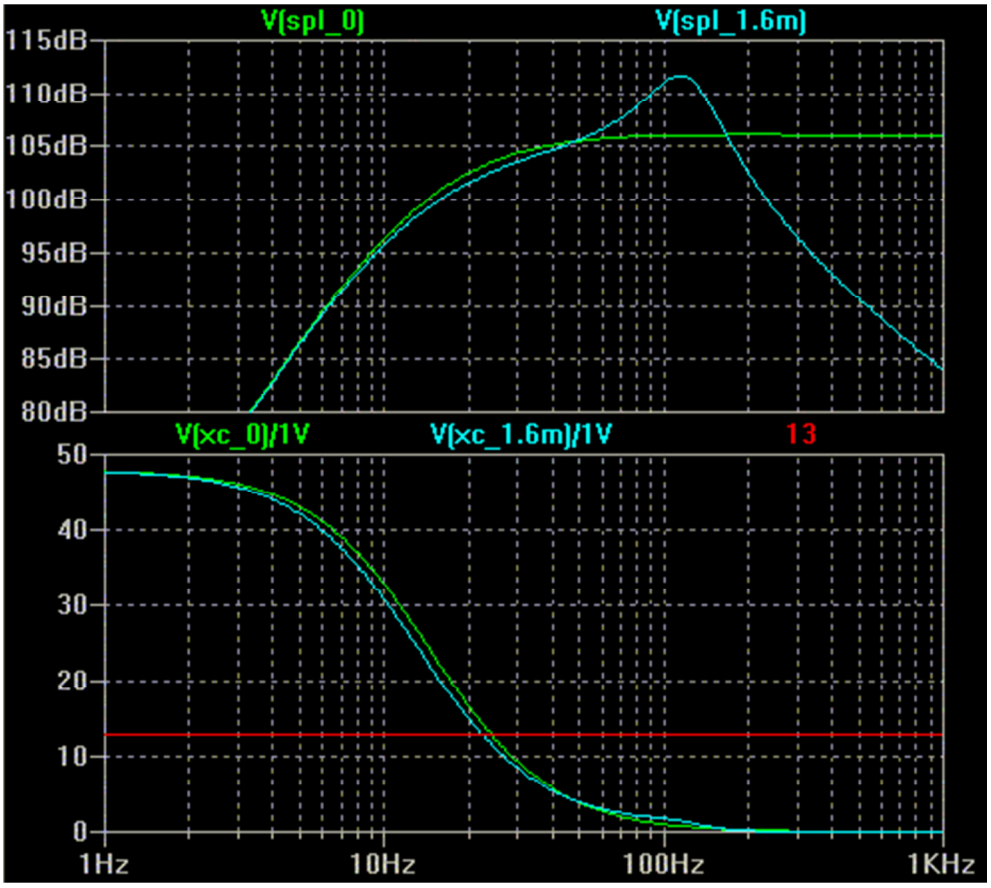

Some explanations about my LTspice modeling is in order (jm-2.asc):

- F1 {E3 4m} : on LTspice, F is a "linear current dependent current source", thus the modeling correctly takes into account the loudspeaker current.
- The current generator G5 divides the Bl.V EMF by Bl and gives the speed V. G5 on capacitor C8 integrates the speed (divides by "s") and gives displacement (1.41 time for peak value).
- The current generator G6 divides the Bl.V EMF by Bl and gives the speed V (2 time for 2 loudspeakers). Remember that pressure in half space = s^2.rho.Sd.X(s)/(2.pi.d) where s.X(s) = speed (see also equation 10 in: http://www.extra.research.philips.com/hera/people/aarts/RMA_papers/aar05pu3.pdf). G6 on inductance L11 differentiates the speed (multiplies by "s") and in eighth space, 2.pi become pi/2. So, p(s) = s.V(s).rho.Sd./(0.5.pi.d) and SPL = 20.log [p(s)/20µPa]

Robert Munnig Schmidt comments:

Cher Jean-Marc, please see my pages under development in: www.rmsacoustics.nl. My own audio system will be posted there completely in due course. Some parts are already available. To answer your question on the LEM module, see the data sheet at http://www.lem.com/docs/products/lah%2050-p%20e.pdf.

Thank you for the clarification on your models; I now much better understand them. I am however a bit puzzled why I get a peak value at 113 Hz of less than 110 dB while the peak value in your graph is higher. Also I get a different graph, maybe you use another version of Spice, I use LTspice IV (rms-2.asc):

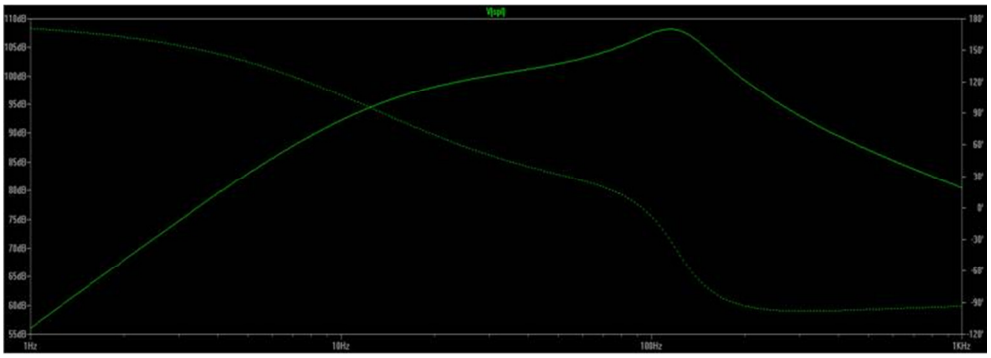

In principle I am not too upset about this resonance as the subwoofer will be used below 80 Hz for a THX setup and the filter can be designed such that the resonance is compensated (pole/zero cancellation).

It is even easier to compensate the phase lag of the 1.6 mH self-inductance, as you suggested in your first comment, by adding a capacitor of 0.22uF parallel to R5, with the same time constant as the loudspeaker RC=Rls/Lls. This gives the following result:

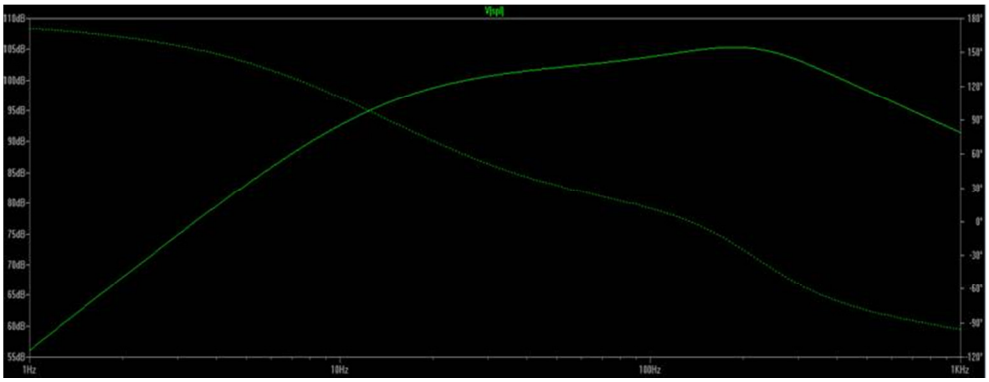

Now only a bit tweaking with the first-order input filter brings the response almost ideally flat within 3 dB (see attached spice file for the settings)

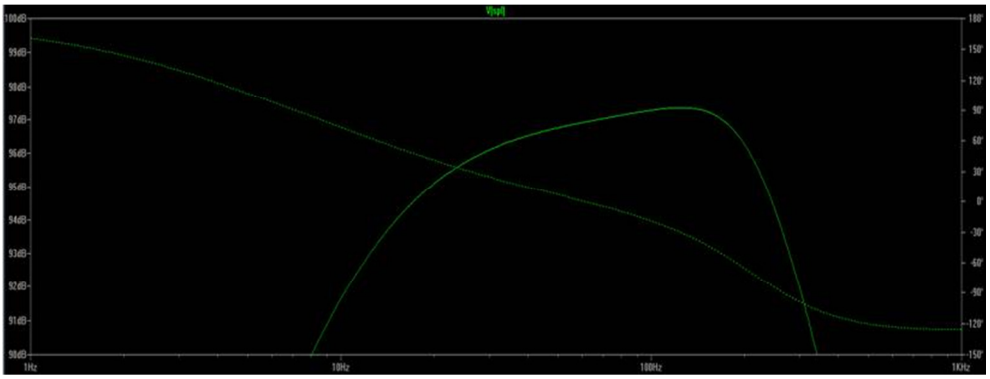

But this level of perfection is rather meaningless as standing waves in the room will cause far larger irregularities as you can see on the following measurements on my home speaker system with real motional feedback (acceleration feedback). More details can be found at my website.

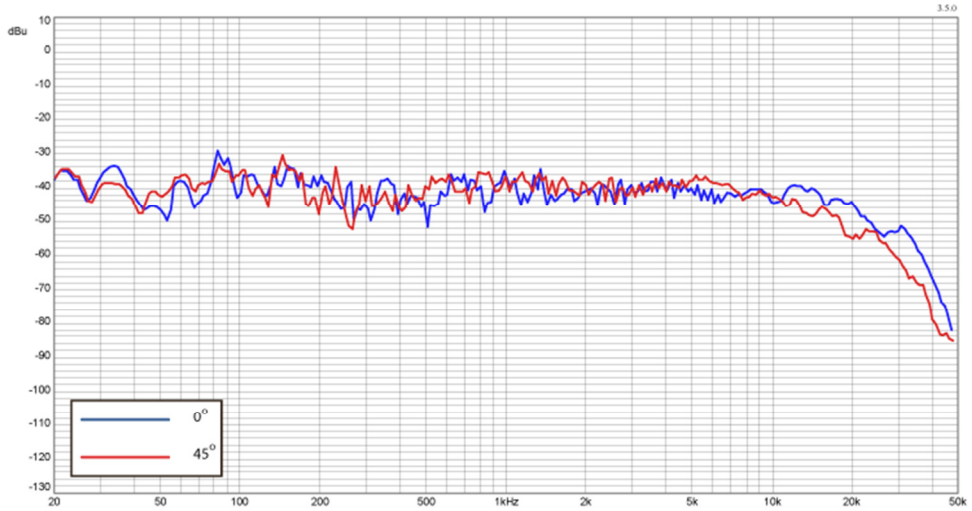

Thank you for your valuable remarks. I learned again some Spice tricks and further possibilities to improve the system.

Jean-Marc Plantefève comments:

We use the same LTspice and we obtain same results, but my simulation was customized, particulary with 0.75V input for 106dB THX with zero inductance. I can only suggest to plot more data: displacement, loudspeaker current, perhaps use an infra-sonic filter (jm-3.pdf).